Miscelatore monocomando lavabo EnergySave H3_AH000475

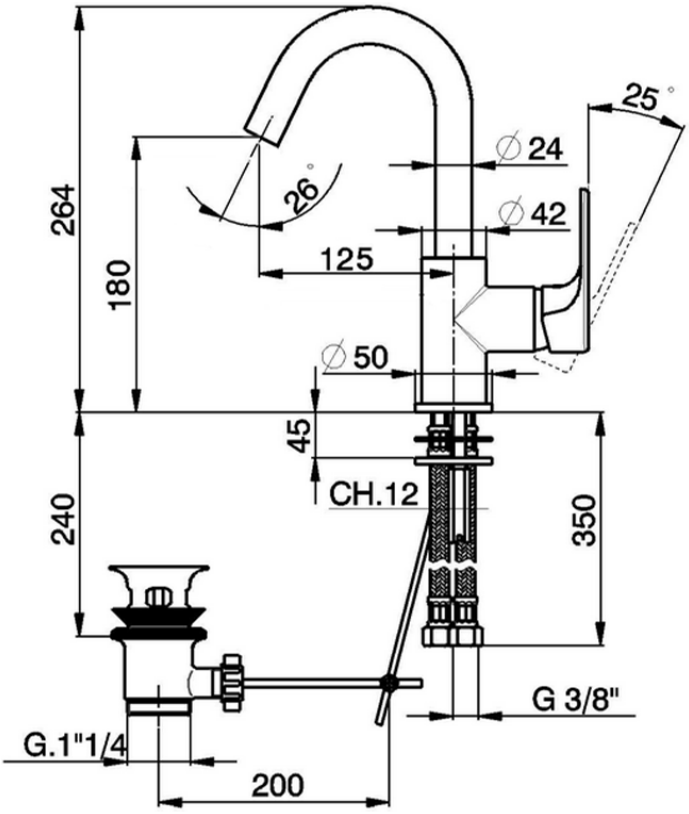

AH000475 https://www.huberitalia.com/miscelatore-monocomando-lavabo-energysave-h3-ah000475

2026-05-03