Completo miscelatore termostatico vasca incasso CROISETTE_914.CS01H.

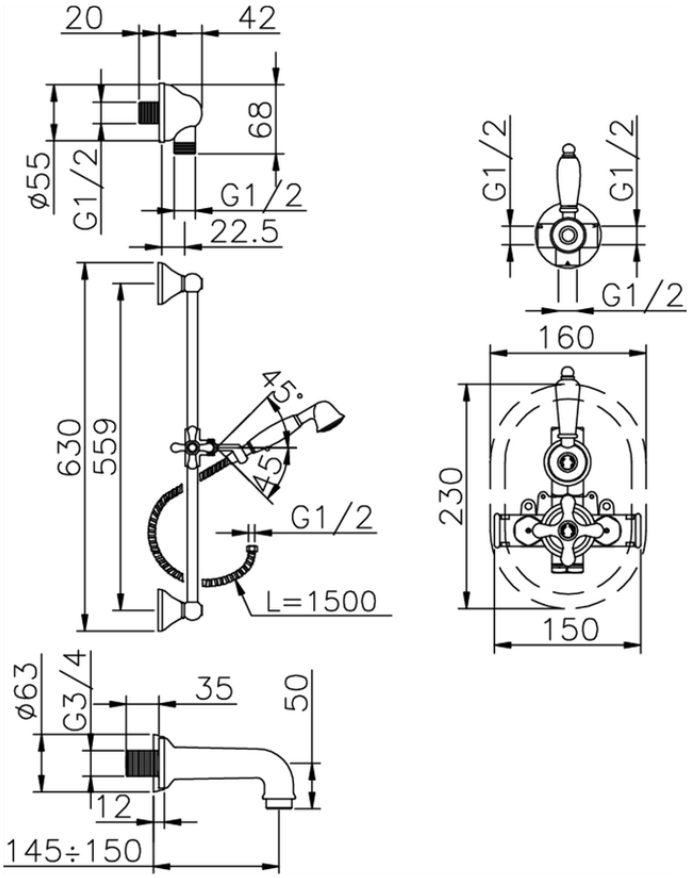

914.CS01H. https://www.huberitalia.com/completo-miscelatore-termostatico-vasca-incasso-croisette-914-cs01h

2026-07-01