Miscelatore monocomando vasca completo HARLOCK_HC000064

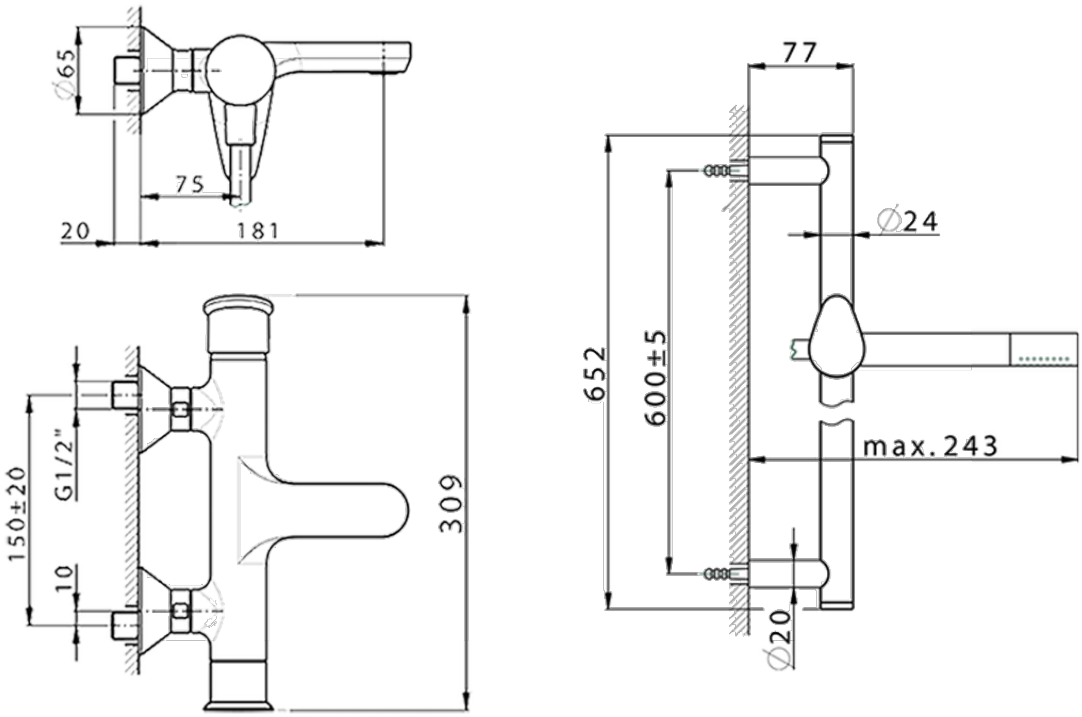

HC000064 https://www.huberitalia.com/miscelatore-monocomando-vasca-completo-harlock-hc000064

2026-10-11