Completo doccia saliscendi Suite SHOWER_62.13H.

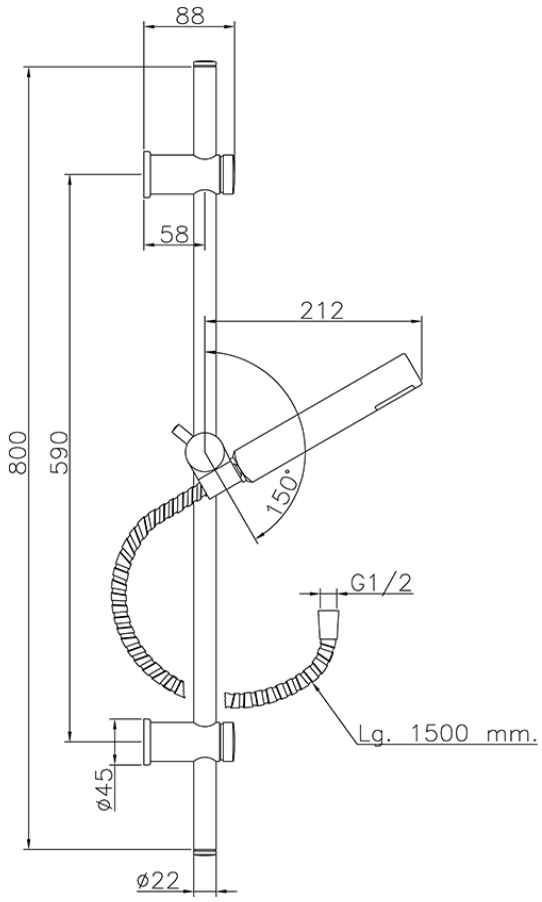

62.13H.

https://www.huberitalia.com/completo-doccia-saliscendi-suite-shower-62-13h

2026-06-17