Parte esterna termostatico doccia incasso 1 uscita THERMO_LY007300

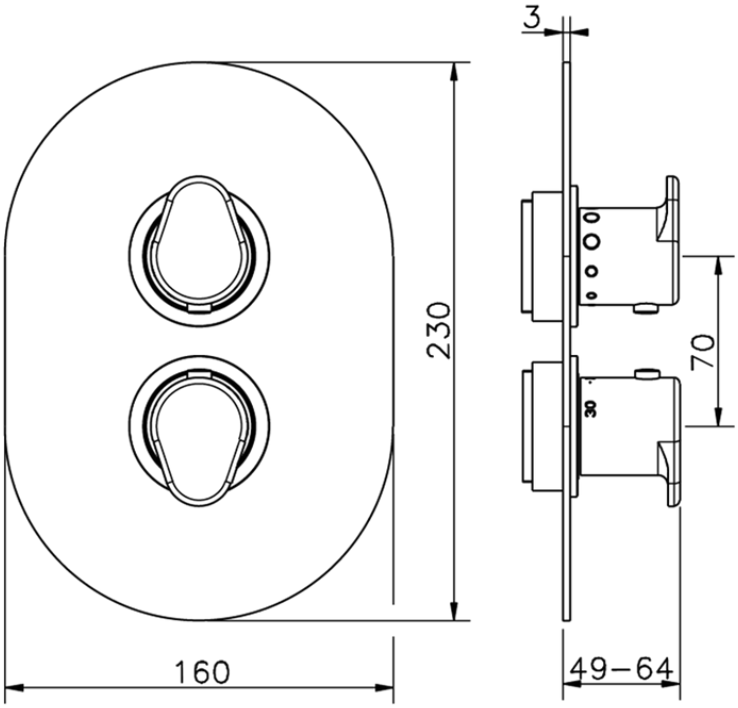

LY007300 https://www.huberitalia.com/parte-esterna-termostatico-doccia-incasso-1-uscita-thermo-ly007300

© 2021 Huber. Via Brughiere, 50. 28017 - San Maurizio (NO) - Italy
Mail: huber@hubertitalia.com, Telefono: (+39) 0322 967783, P.Iva IT02422800033.

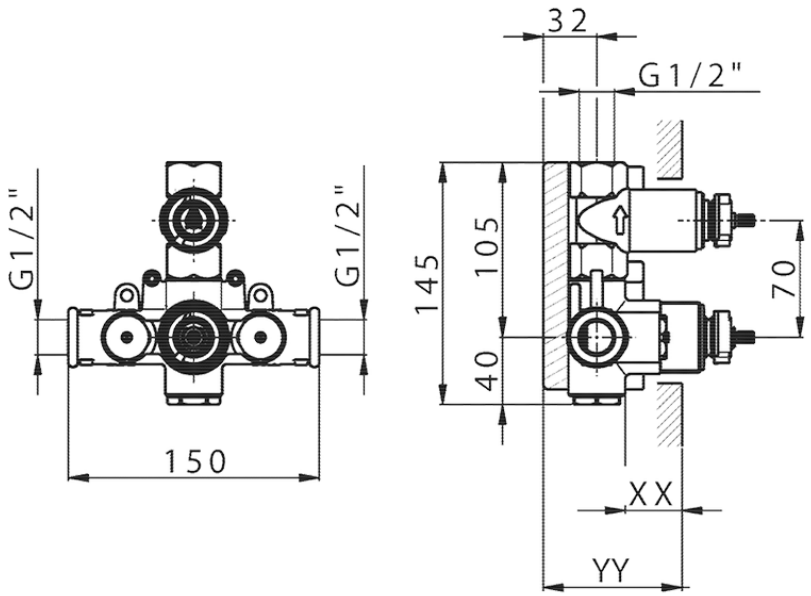

Piastra/Plate/Plaque/Platte/Placa
2-3mm: XX 25-40 YY 76-91
10 mm: XX 16-31 YY 65-80

ZB007301 https://www.huberitalia.com/parte-incasso-termostatico-doccia-1-uscita-incasso-zb007301

2026-10-15

© 2021 Huber. Via Brughiere, 50. 28017 - San Maurizio (NO) - Italy
Mail: huber@hubertitalia.com, Telefono: (+39) 0322 967783, P.Iva IT02422800033.