Miscelatore monocomando doccia incasso ZARA_ZR000304

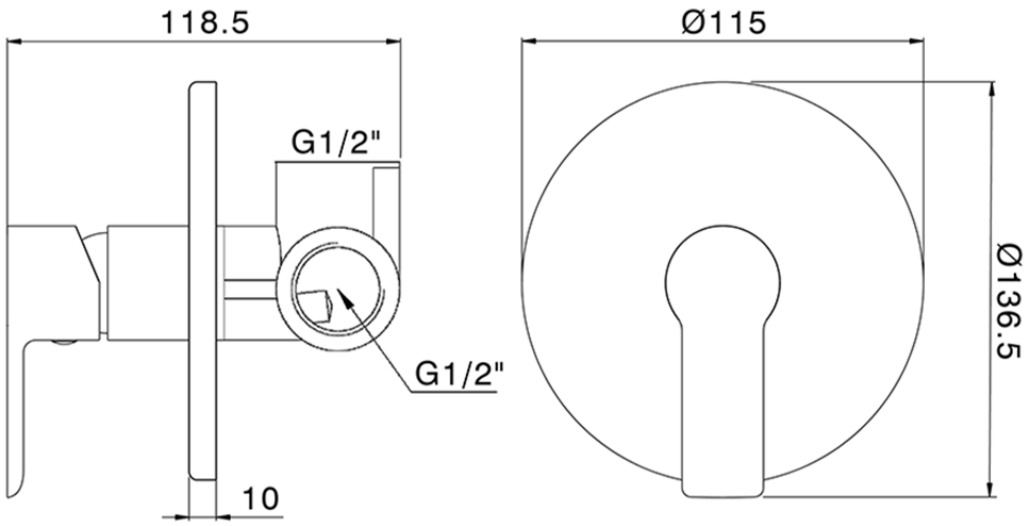

ZR000304 https://www.huberitalia.com/miscelatore-monocomando-doccia-incasso-zara-zr000304

2026-11-24

© 2021 Huber. Via Brughiere, 50. 28017 - San Maurizio (NO) - Italy
Mail: huber@hubertitalia.com, Telefono: (+39) 0322 967783, P.Iva IT02422800033.