Completo miscelatore termostatico doccia incasso VICTORIAN_913.VT01H.

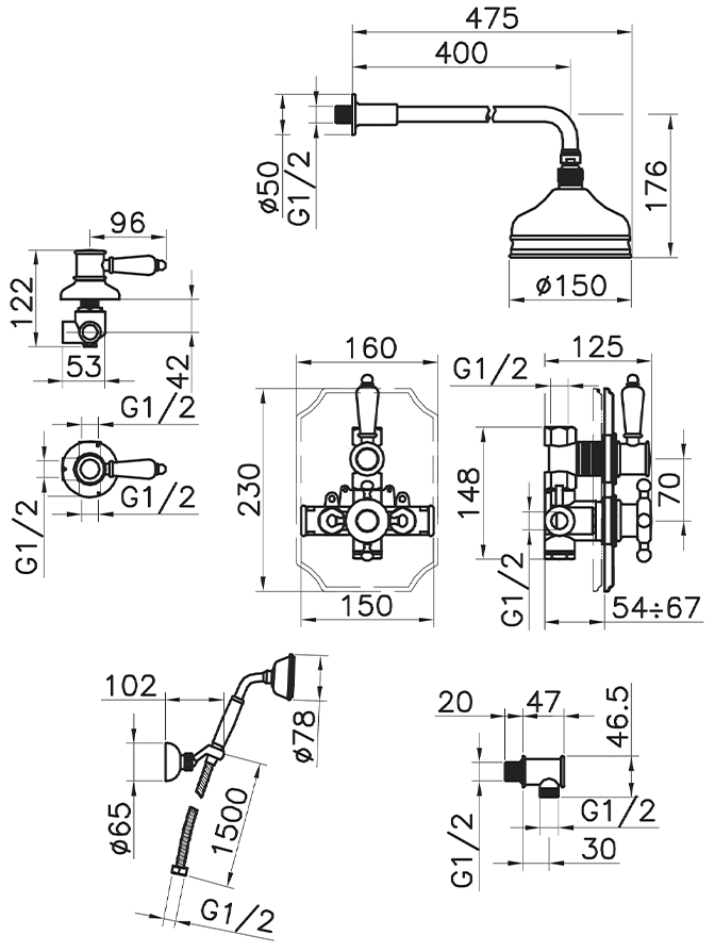

913.VT01H. https://www.huberitalia.com/completo-miscelatore-termostatico-doccia-incasso-victorian-913-vt01h

2026-05-14