Miscelatore termostatico vasca completo LEVITY_LYD21010

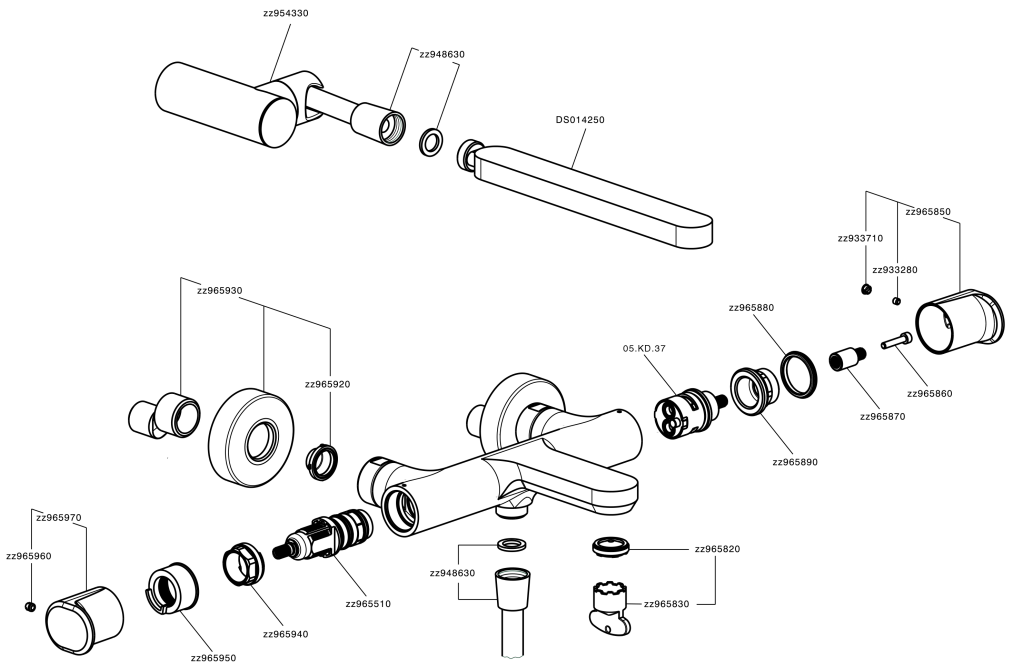

LYD21010 https://www.huberitalia.com/miscelatore-termostatico-vasca-completo-levity-lyd21010

2026-10-15