Huber
TEL. (+39) 0322 967783
MAIL. huber@huberitalia.com

Miscelatore lavabo CROISETTE

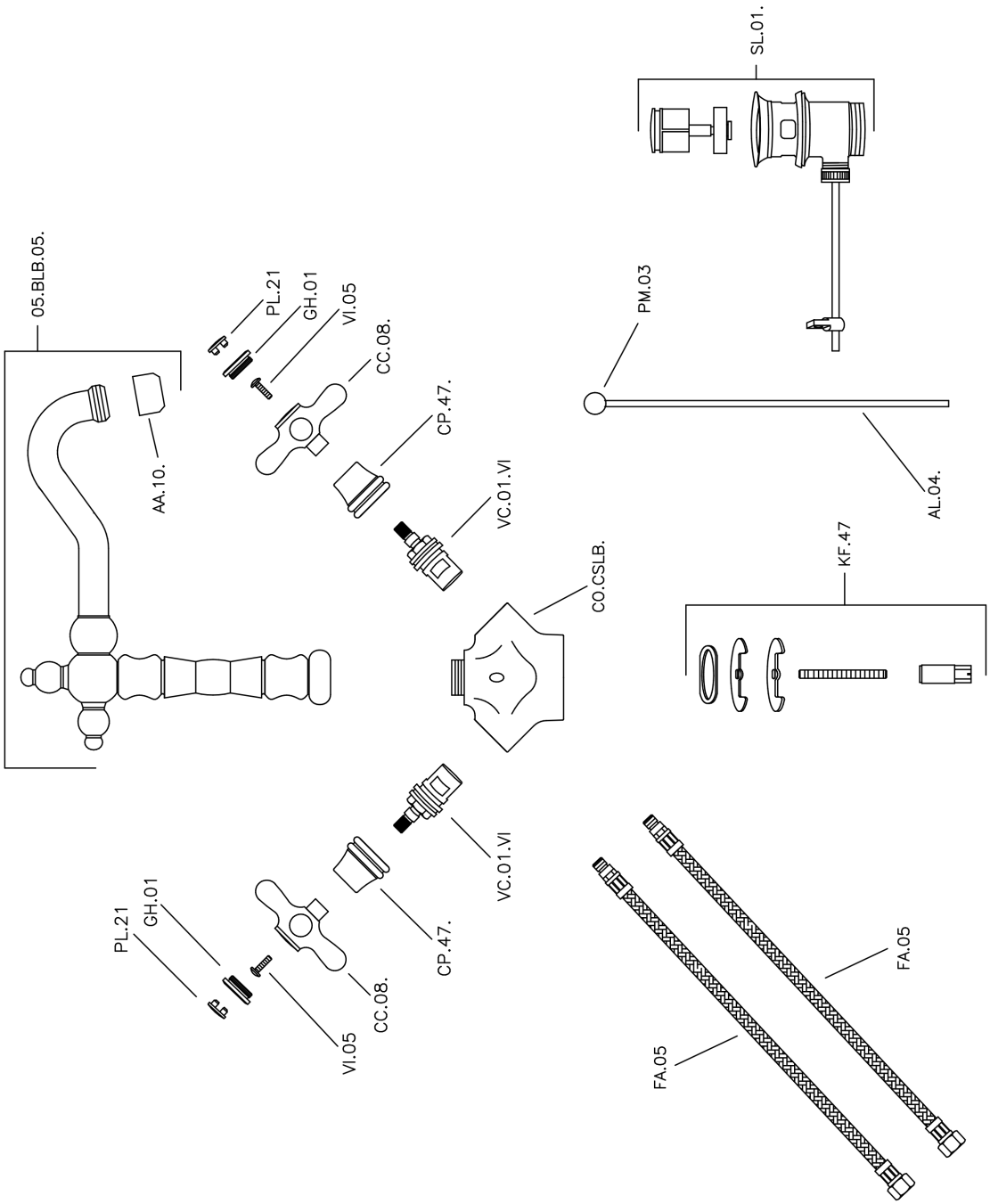

CS000520

https://www.huberitalia.com/miscelatore-lavabo-croisettecs000520

2024-05-05

© 2021 Huber. Via Brughiere, 50. 28017 - San Maurizio (NO) - Italy
Mail: huber@hubertitalia.com, Telefono: (+39) 0322 967783, P.Iva IT02422800033.