Miscelatore monocomando lavabo NUOVA KIRUNA_K2000510

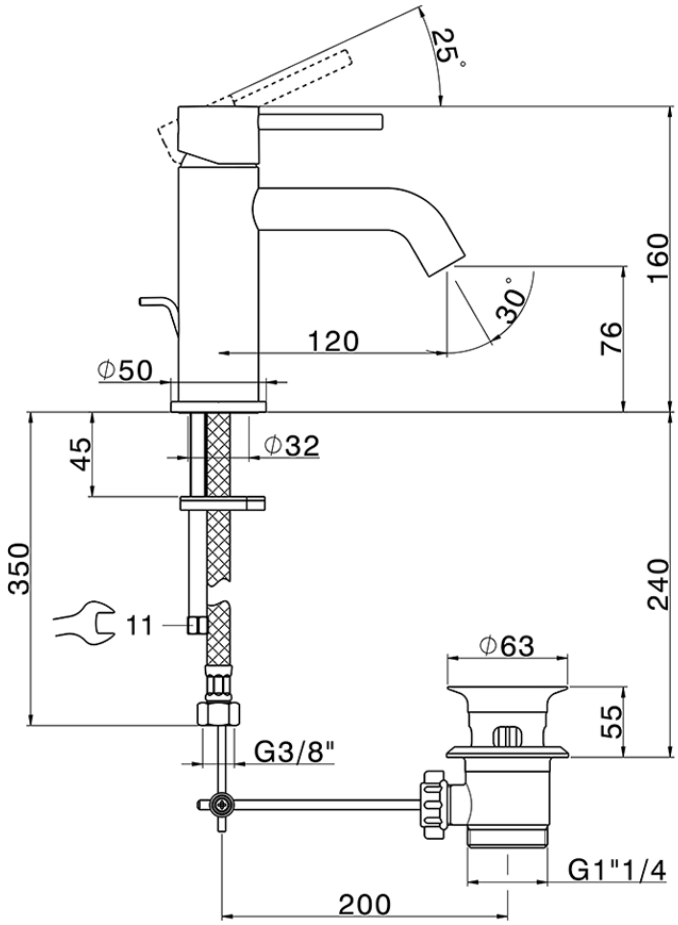

K2000510 https://www.huberitalia.com/miscelatore-monocomando-lavabo-nuova-kiruna-k2000510

2026-06-13