Huber
TEL. (+39) 0322 967783
MAIL. huber@huberitalia.com

Miscelatore monocomando vasca-doccia incasso ZARA_ZR000214

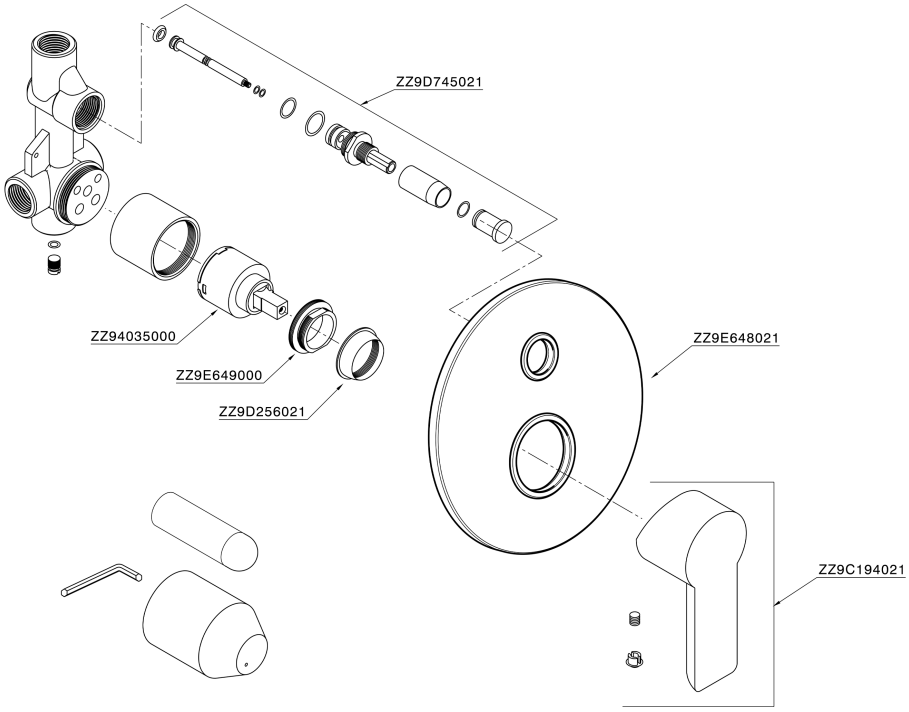

ZR000214 https://www.huberitalia.com/miscelatore-monocomando-vasca-doccia-incasso-zara-zr000214

2026-03-07

© 2021 Huber. Via Brughiere, 50. 28017 - San Maurizio (NO) - Italy
Mail: huber@hubertitalia.com, Telefono: (+39) 0322 967783, P.Iva IT02422800033.