Miscelatore monocomando lavello EnergySave KITCHEN_H2002535

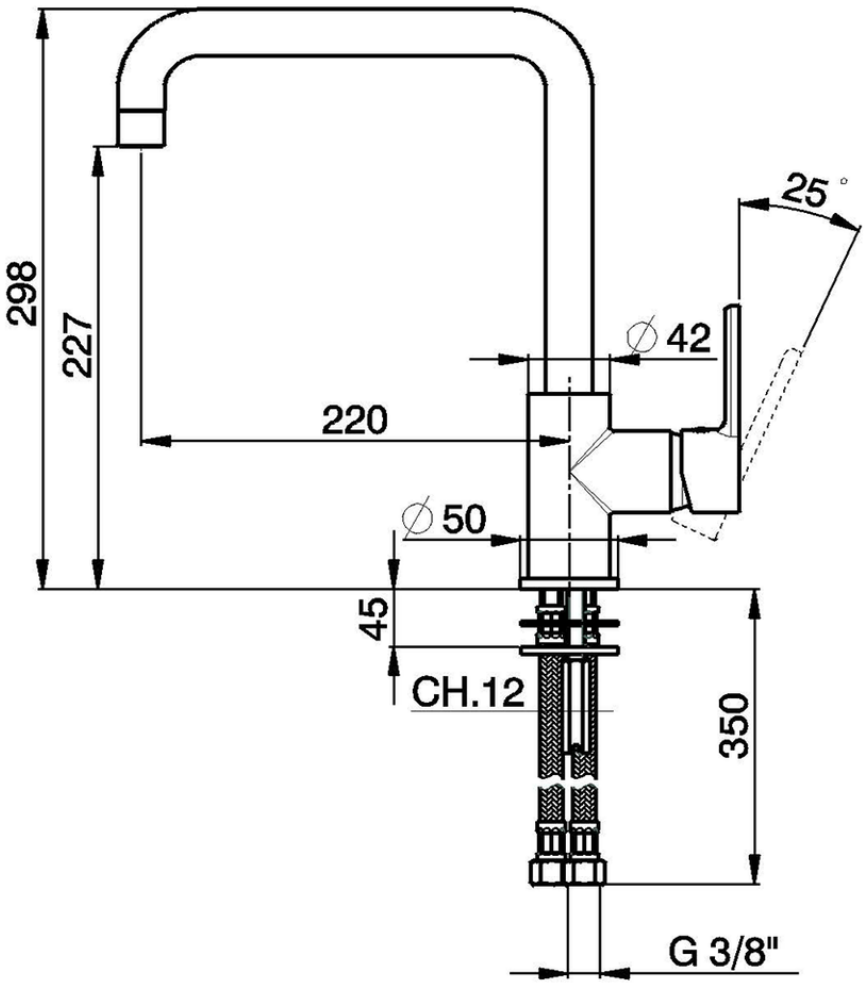

H2002535 https://www.huberitalia.com/miscelatore-monocomando-lavello-energysave-kitchen-h2002535

2026-06-27