Huber
TEL. (+39) 0322 967783
MAIL. huber@huberitalia.com

Completo miscelatore termostatico doccia incasso CROISETTE_912.CS01H.

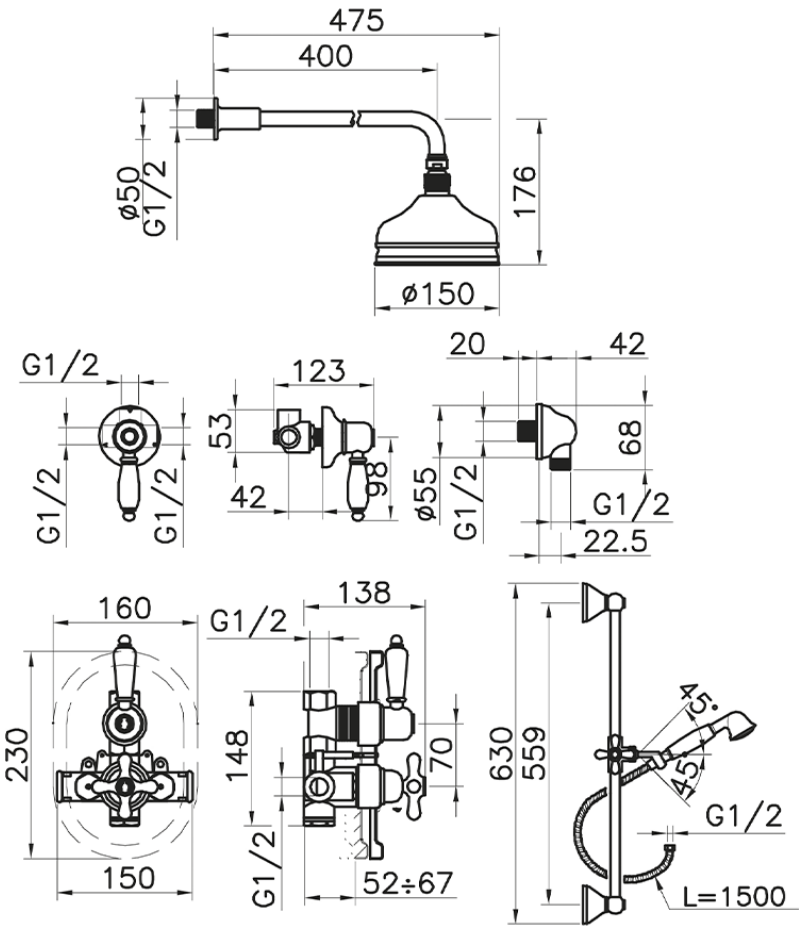

912.CS01H. https://www.huberitalia.com/completo-miscelatore-termostatico-doccia-incasso-croisette-912-cs01h

2026-11-25

© 2021 Huber. Via Brughiere, 50. 28017 - San Maurizio (NO) - Italy
Mail: huber@hubertitalia.com, Telefono: (+39) 0322 967783, P.Iva IT02422800033.