Miscelatore bidet EVA_EV000558

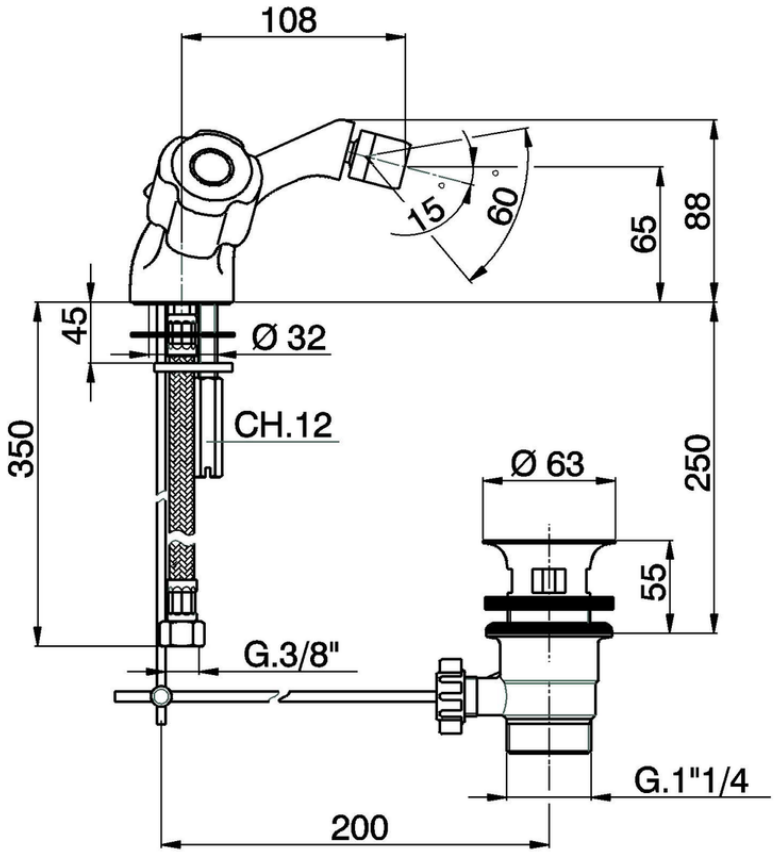

EV000558

https://www.huberitalia.com/miscelatore-bidet-eva-ev000558

2026-04-17