Huber
TEL. (+39) 0322 967783
MAIL. huber@huberitalia.com

Rubinetto monoacqua LEVITY_LY000900

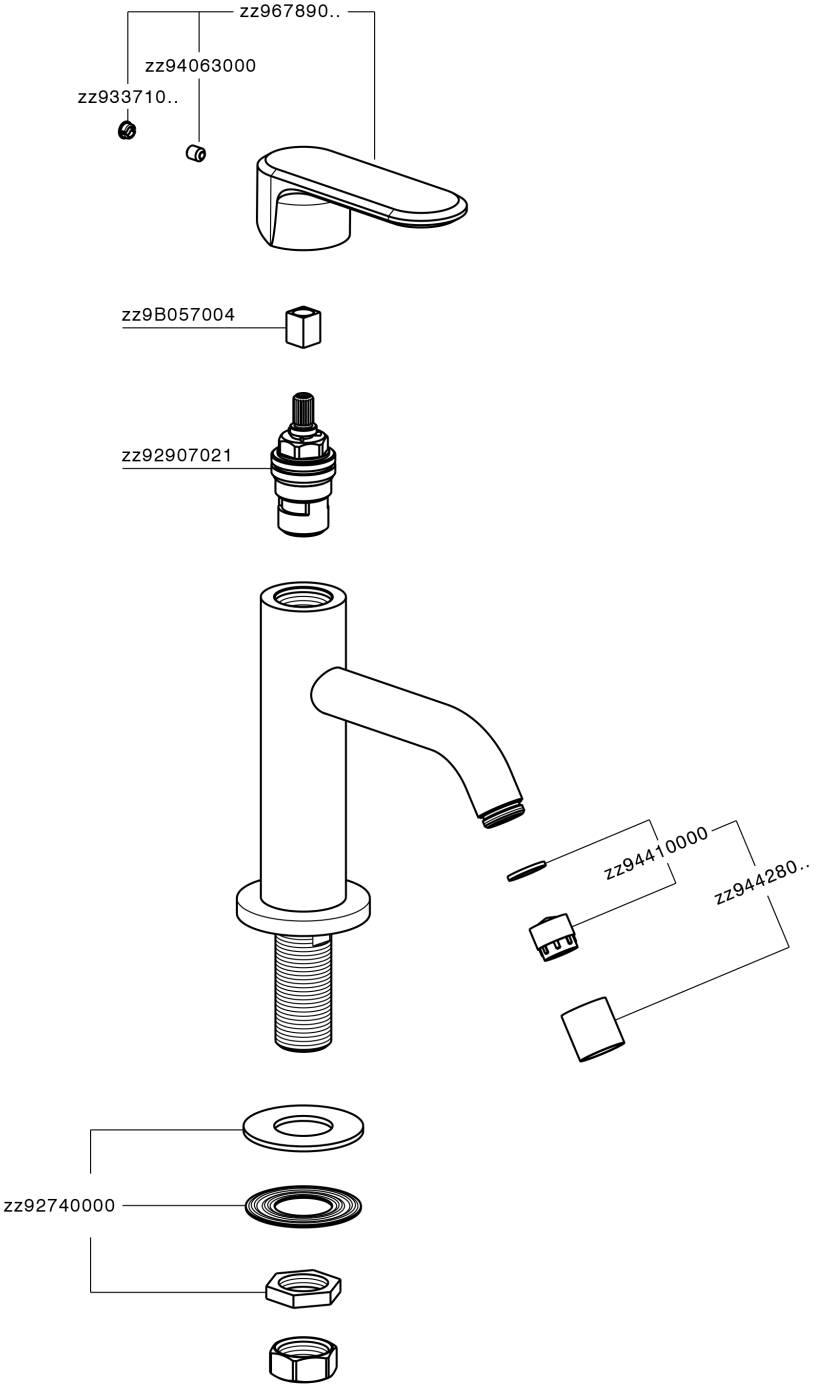

LY000900

https://www.huberitalia.com/rubinetto-monoacqua-levity-ly000900

2026-01-26

© 2021 Huber. Via Brughiere, 50. 28017 - San Maurizio (NO) - Italy
Mail: huber@hubertitalia.com, Telefono: (+39) 0322 967783, P.Iva IT02422800033.