Huber
TEL. (+39) 0322 967783
MAIL. huber@huberitalia.com

Miscelatore bordo vasca 5 fori LYNOX_LX000260

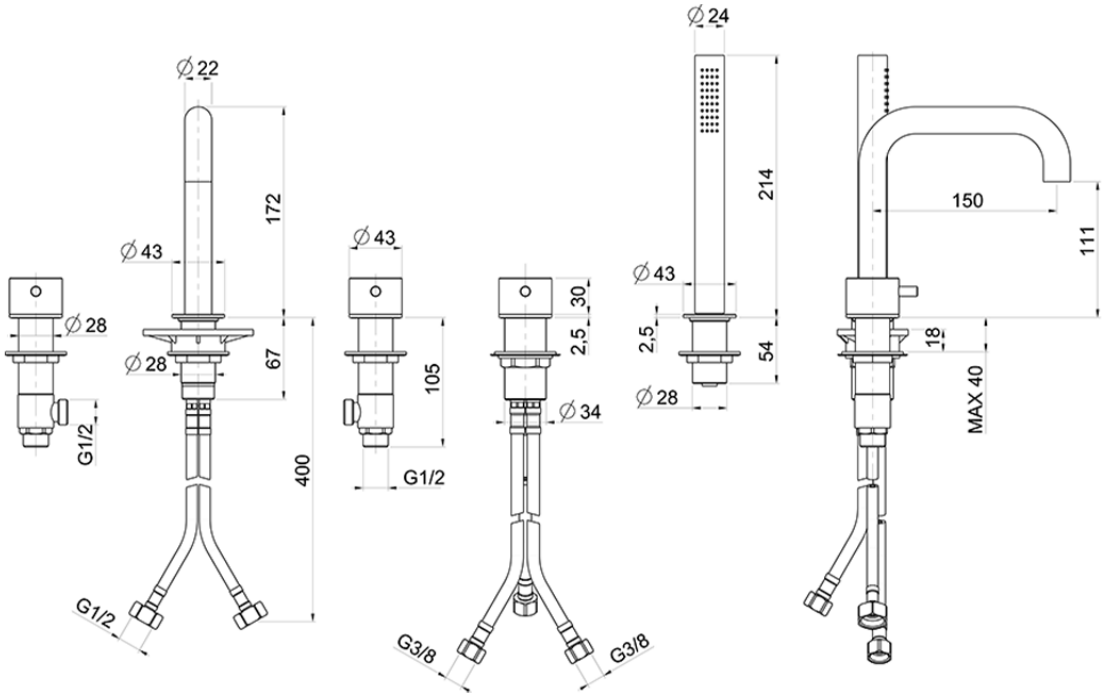

LX000260

https://www.huberitalia.com/miscelatore-bordo-vasca-5-fori-lynox-lx000260

2026-07-01

© 2021 Huber. Via Brughiere, 50. 28017 - San Maurizio (NO) - Italy
Mail: huber@hubertitalia.com, Telefono: (+39) 0322 967783, P.Iva IT02422800033.