Miscelatore monocomando bidet EnergySave H3_AH002555

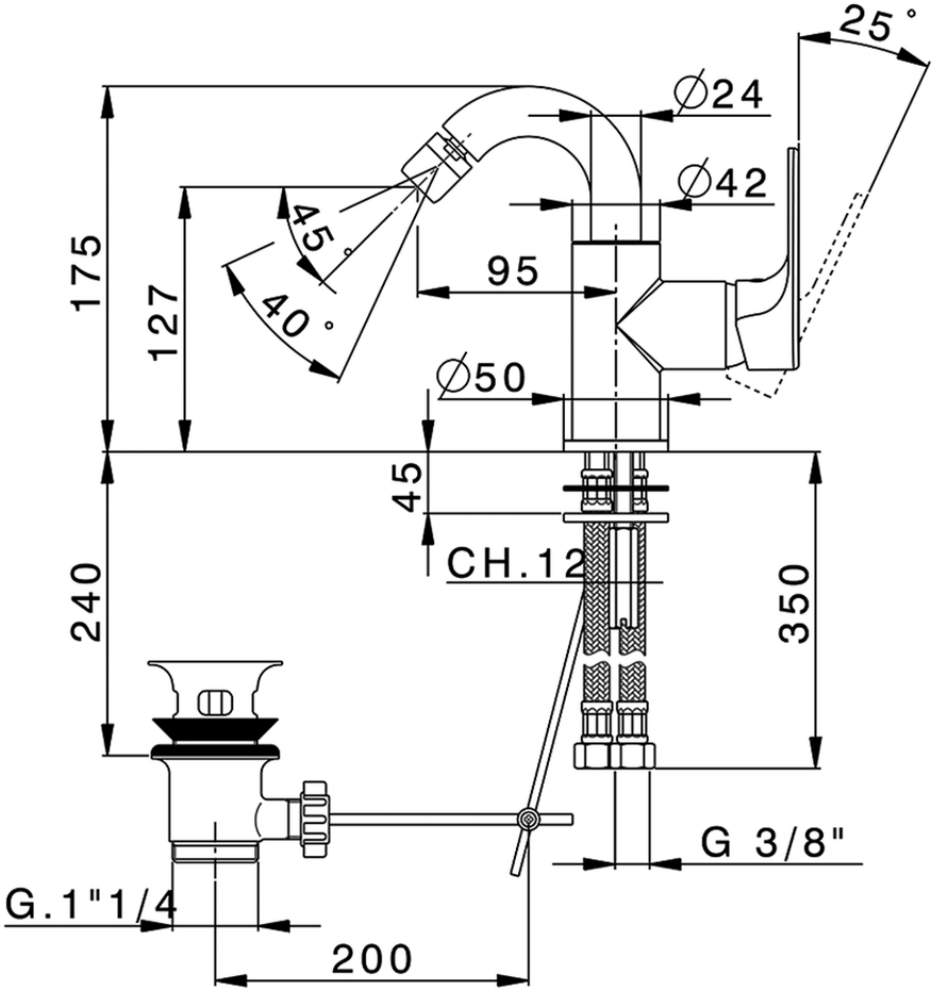

AH002555 https://www.huberitalia.com/miscelatore-monocomando-bidet-energysave-h3-ah002555

2026-03-03