Colonna vasca termostatica 3 funzioni VICTORIAN_592.VN31H.

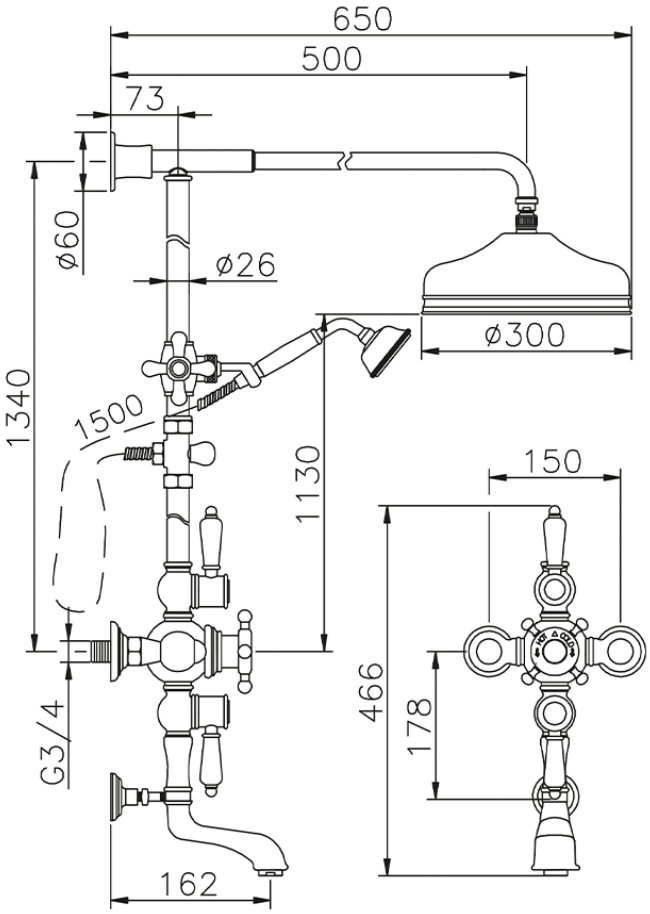

592.VN31H. https://www.huberitalia.com/colonna-vasca-termostatica-3-funzioni-victorian-592-vn31h

2026-02-16