Completo miscelatore termostatico vasca incasso VICTORIAN_915.VT01H.

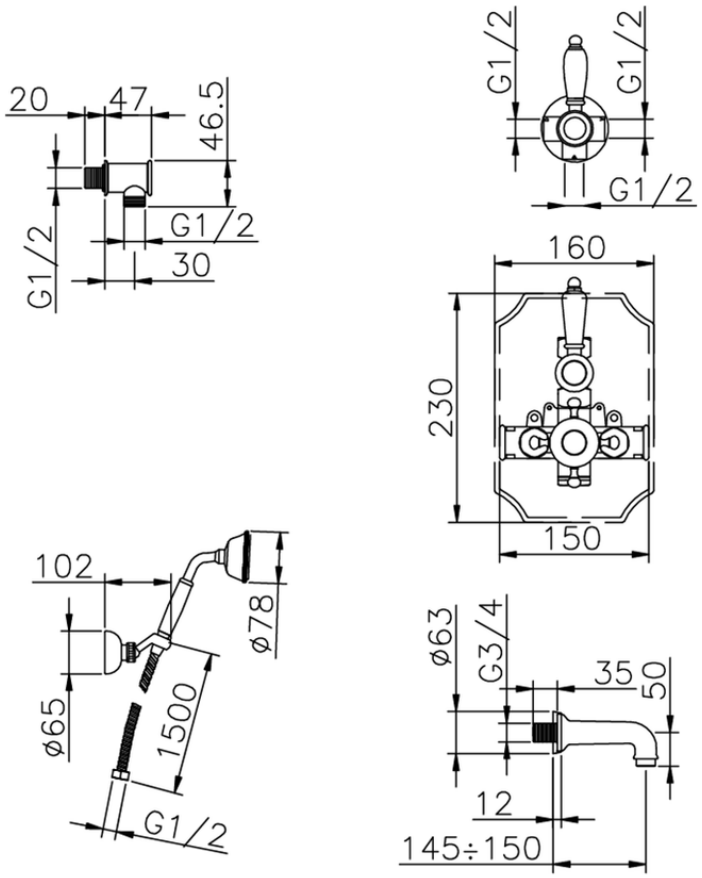

915.VT01H. https://www.huberitalia.com/completo-miscelatore-termostatico-vasca-incasso-victorian-915-vt01h

2026-04-18