Rubinetto d'arresto incasso VICTORIAN

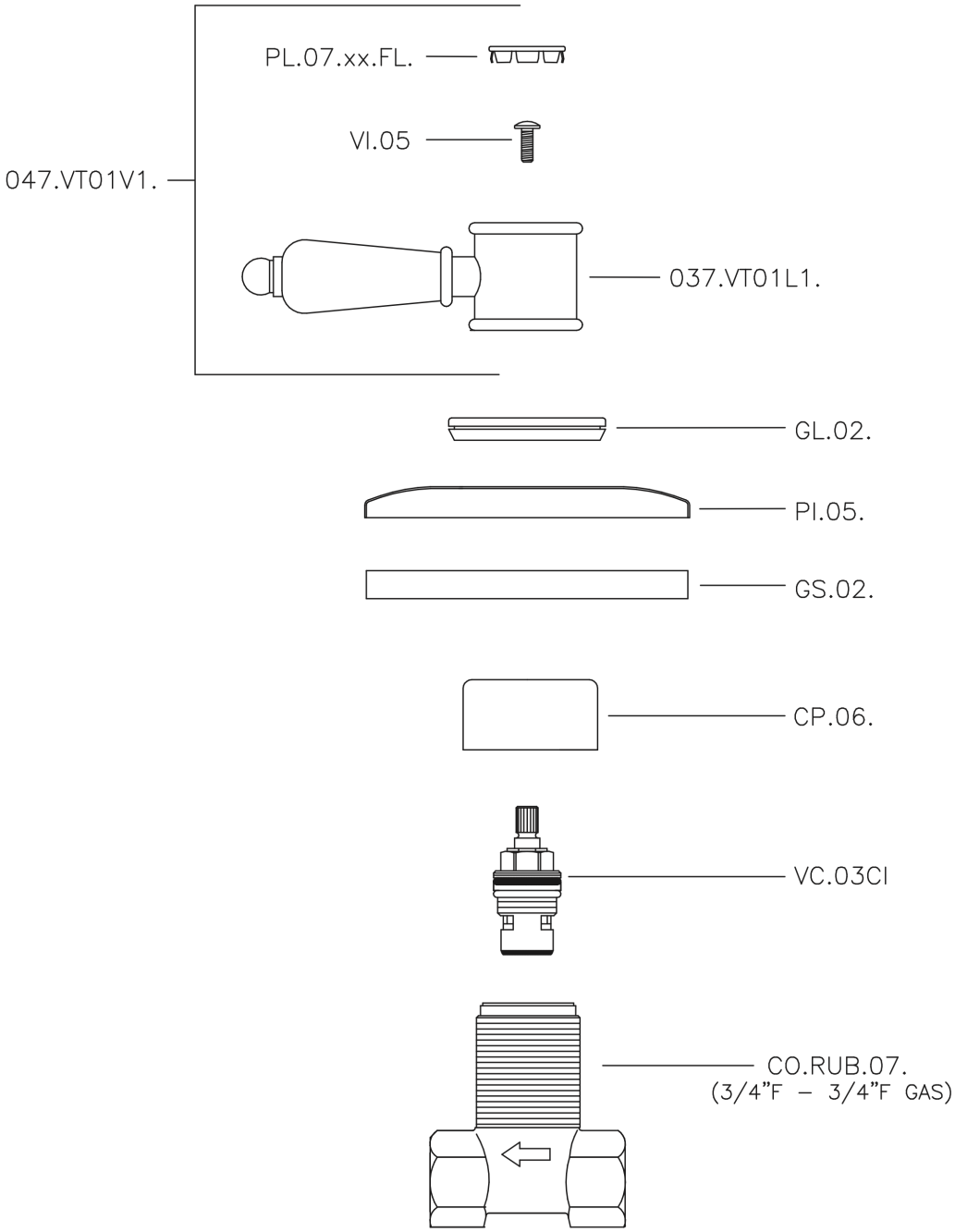

VT000313

https://www.huberitalia.com/rubinetto-darresto-incasso-victorianvt000313

2024-04-29

© 2021 Huber. Via Brughiere, 50. 28017 - San Maurizio (NO) - Italy
Mail: huber@hubertitalia.com, Telefono: (+39) 0322 967783, P.Iva IT02422800033.