Parte esterna termostatico doccia incasso CROISETTE_CS007200

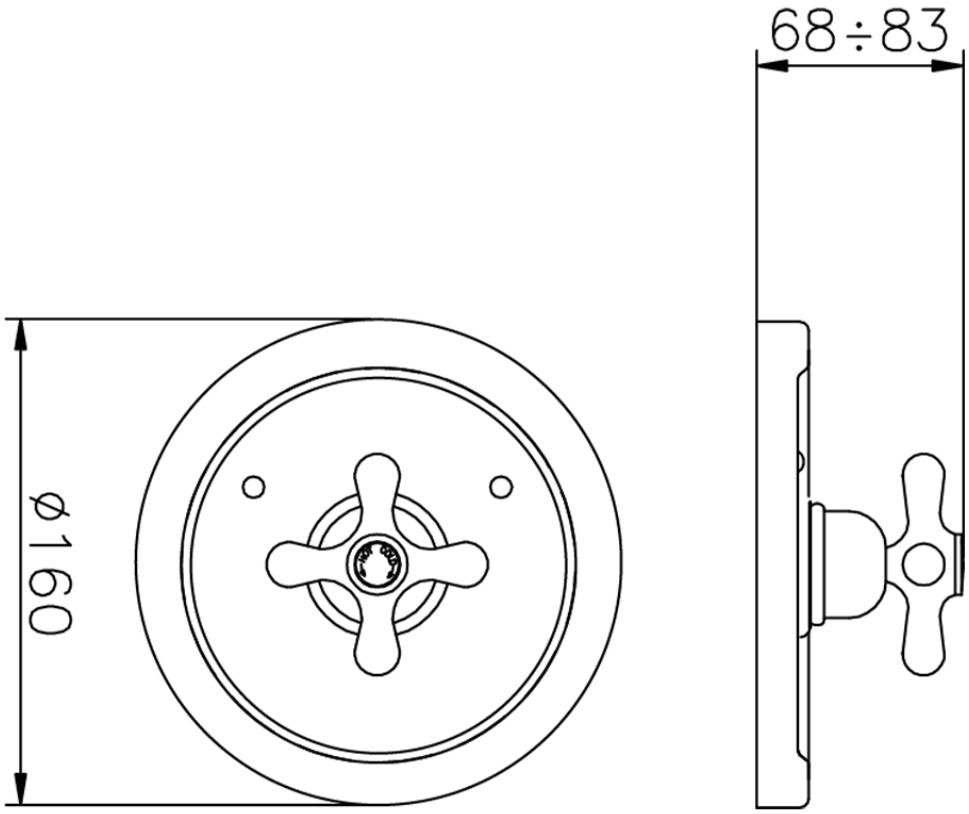

CS007200 https://www.huberitalia.com/parte-esterna-termostatico-doccia-incasso-croisette-cs007200

© 2021 Huber. Via Brughiere, 50. 28017 - San Maurizio (NO) - Italy
Mail: huber@hubertitalia.com, Telefono: (+39) 0322 967783, P.Iva IT02422800033.

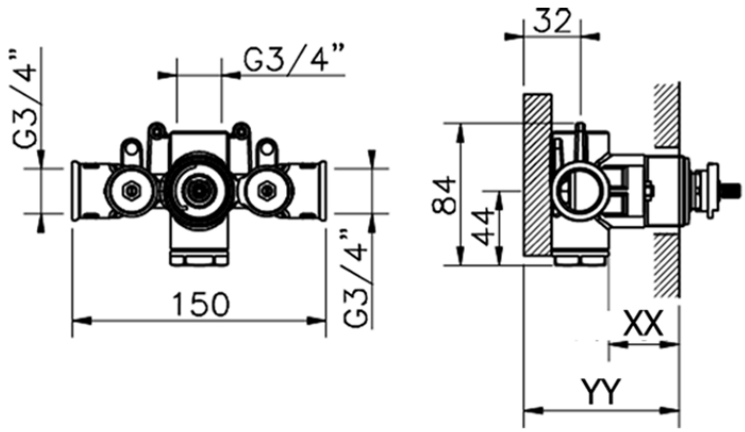

Piastra/Plate/Plaque/Platte/Placa
2-3mm: XX 25-40 YY 76-91
10mm: XX 16-31 YY 65-80

ZB007221 https://www.huberitalia.com/parte-incasso-termostatico-doccia-3-4-incasso-zb007221

© 2021 Huber. Via Brughiere, 50. 28017 - San Maurizio (NO) - Italy
Mail: huber@hubertitalia.com, Telefono: (+39) 0322 967783, P.Iva IT02422800033.

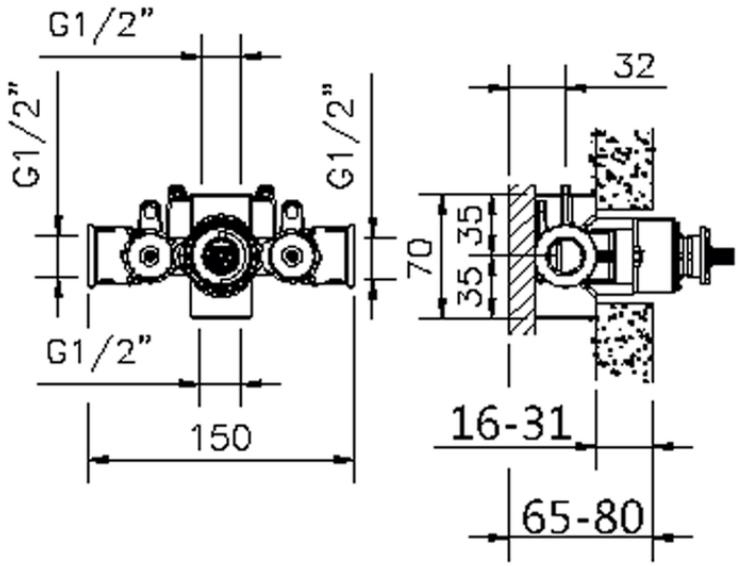

ZB007201 https://www.huberitalia.com/parte-incasso-termostatico-doccia-1-2-incasso-zb007201

2026-11-26

© 2021 Huber. Via Brughiere, 50. 28017 - San Maurizio (NO) - Italy
Mail: huber@hubertitalia.com, Telefono: (+39) 0322 967783, P.Iva IT02422800033.