Kit completo miscelatore termostatico doc. incasso KIRUNA

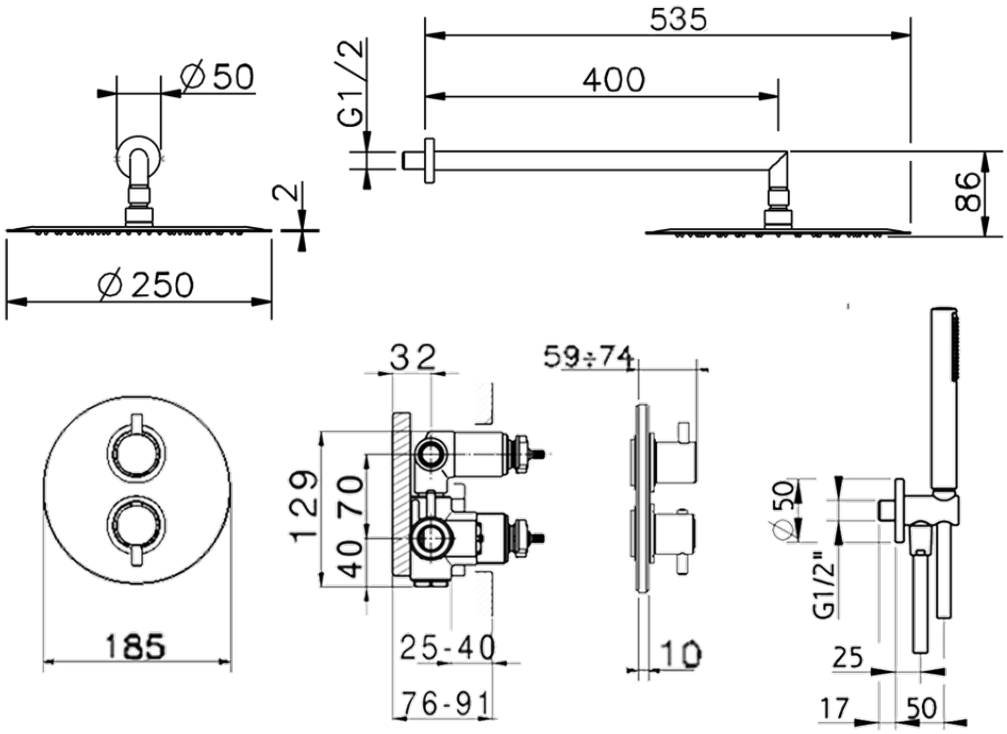

KR0KT010 https://www.huberitalia.com/kit-completo-miscelatore-termostatico-doc-incasso-kirunakr0kt010

2024-05-03