Miscelatore termostatico vasca completo ADVANT

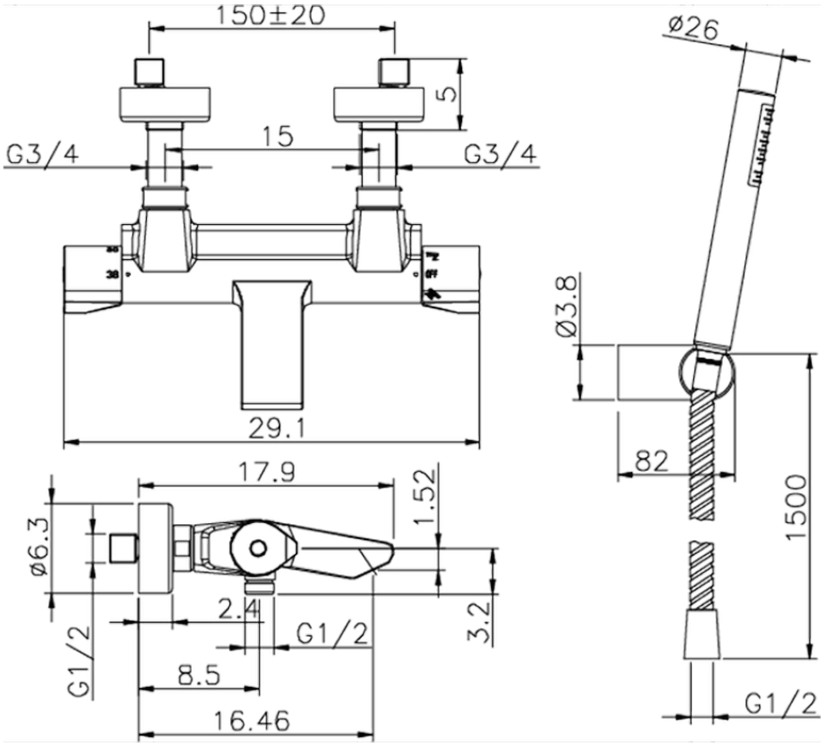

ADD21010 https://www.huberitalia.com/miscelatore-termostatico-vasca-completo-advantadd21010

2024-04-27

© 2021 Huber. Via Brughiere, 50. 28017 - San Maurizio (NO) - Italy
Mail: huber@hubertitalia.com, Telefono: (+39) 0322 967783, P.Iva IT02422800033.