Set doccetta igienica completo IDROSCOPINI_TV007975

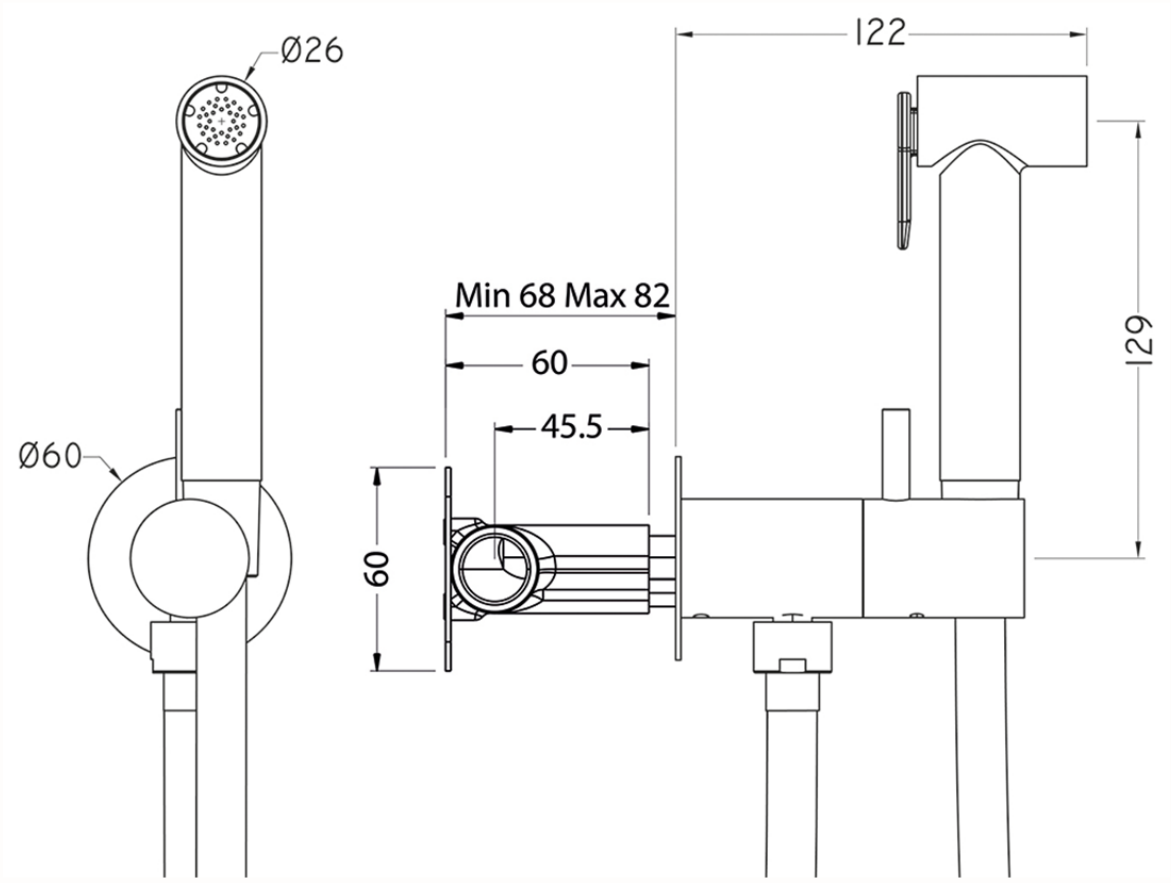

TV007975 https://www.huberitalia.com/set-doccetta-igienica-completo-idroscopini-tv007975

2026-10-25