Huber
TEL. (+39) 0322 967783
MAIL. huber@huberitalia.com

Miscelatore monocomando lavabo alto NUOVA EGO_NE003544

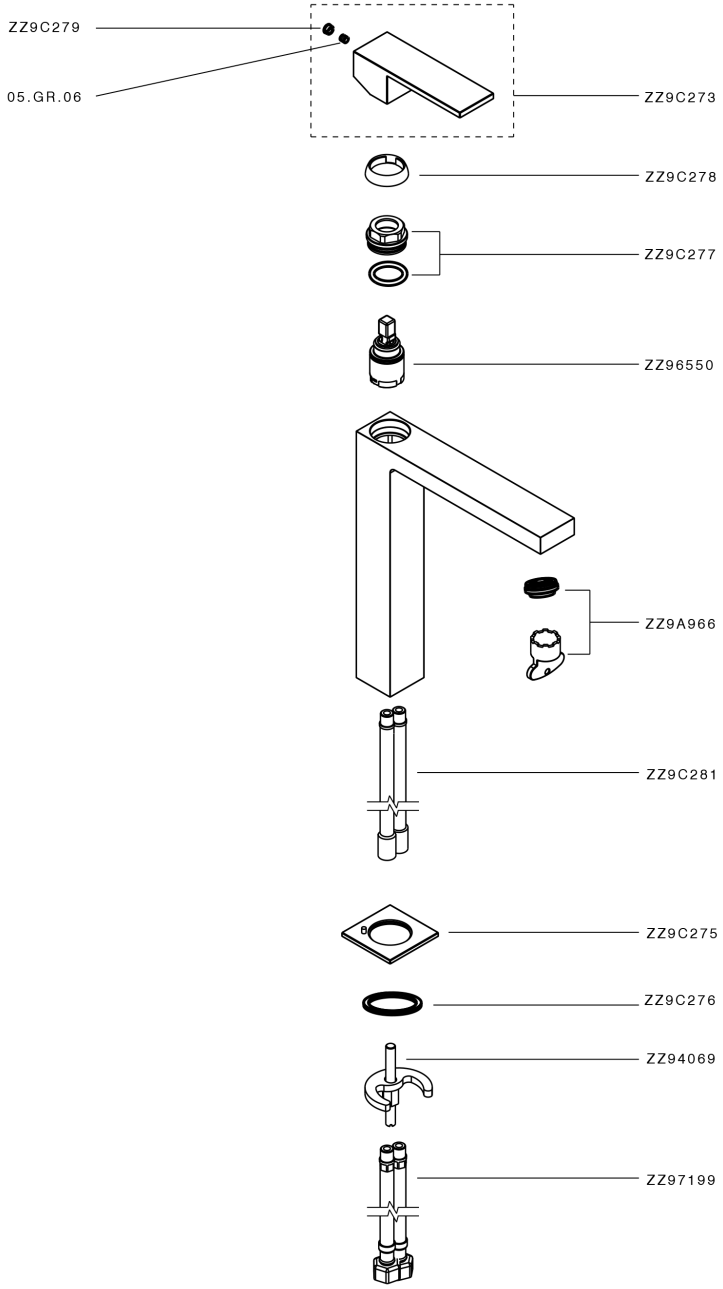

NE003544 https://www.huberitalia.com/miscelatore-monocomando-lavabo-alto-nuova-ego-ne003544

2026-09-15

© 2021 Huber. Via Brughiere, 50. 28017 - San Maurizio (NO) - Italy
Mail: huber@hubertitalia.com, Telefono: (+39) 0322 967783, P.Iva IT02422800033.