Miscelatore lavabo 3 fori NUOVA KIRUNA_K2001060

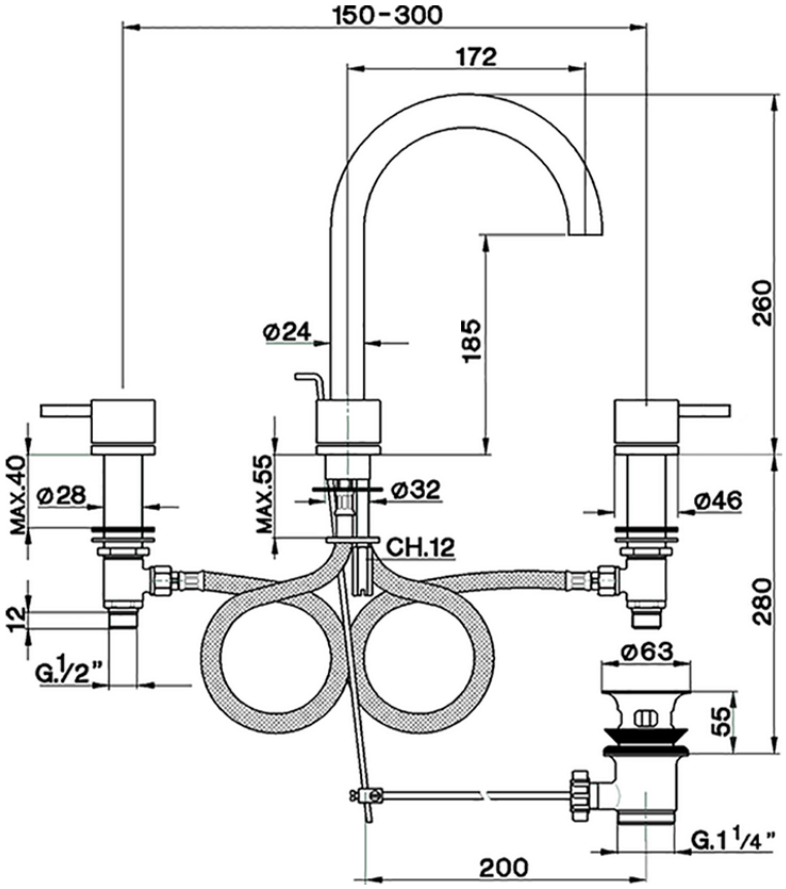

K2001060 https://www.huberitalia.com/miscelatore-lavabo-3-fori-nuova-kiruna-k2001060

2026-04-29