Miscelatore monocomando bidet EnergySave H2_H2002555

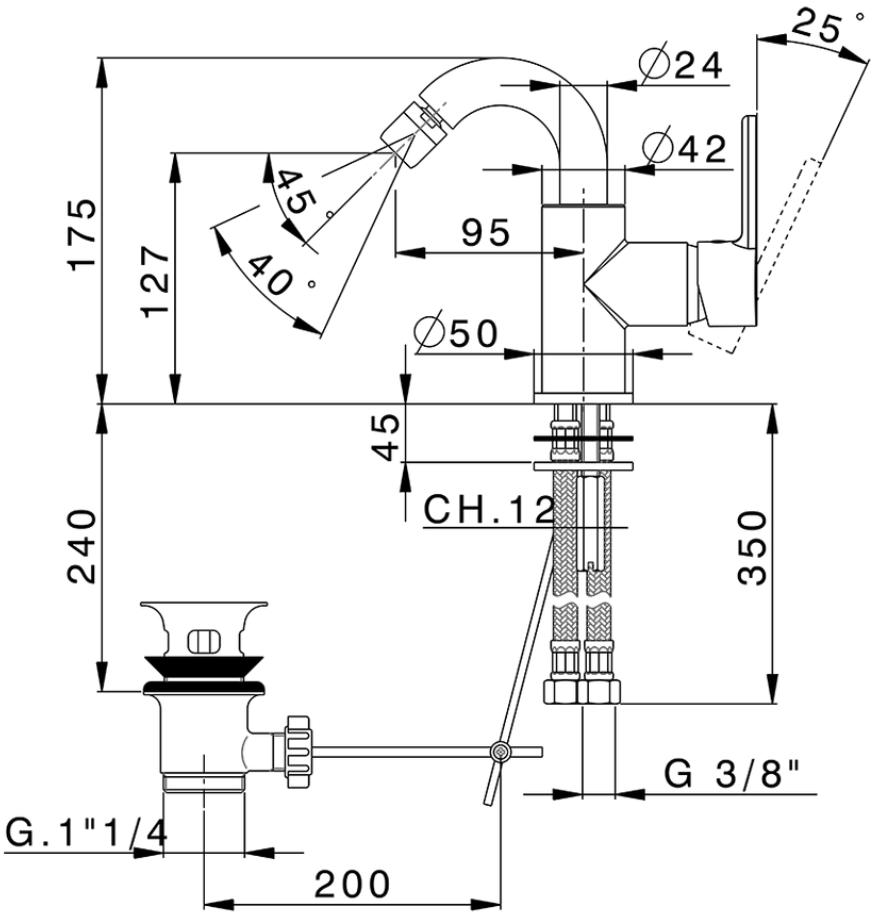

H2002555 https://www.huberitalia.com/miscelatore-monocomando-bidet-energysave-h2-h2002555

2026-06-27

© 2021 Huber. Via Brughiere, 50. 28017 - San Maurizio (NO) - Italy
Mail: huber@hubertitalia.com, Telefono: (+39) 0322 967783, P.Iva IT02422800033.